BIG RAIN Rain panel for ceiling installation or ceiling substructure installation - Stainless Steel

41 400 979

- Rain panel with 2 different spray modes
- PURIFY RAIN, 200 x 160 mm, max. flow rate 9.5 l/min (at 3 bar)
- FULL RAIN, 360 x 280 mm, max. flow rate 9.5 l/min (at 3 bar)
- cover plate, stainless steel 600 x 480 mm
- 2x flexible connection hose 1/2" - female thread
- 4x mounting pin
- pre-fitted stainless steel enclosure
- with anti-scale system

technical data:

- minimum flow rate 9.5 l/min (both rain modes together)
- minimum flow pressure 2 bar
- max. flow pressure 4 bar
- weight: 12kg

technical data:

plumbing:

- recommended water hardness: 6-7 °dH - if the water is harder, integrate a water softener that uses the ion exchange principle into the feed pipe.
- for choosing the drainage, taking into consideration the discharge of all the products in the shower, the specific demand needs to be assessed. Recommendation: Floor drain (connected rating) = 1l/sec, drainage rate DN 50
- feed pipe (hot/cold): 2x DN 20
- for the optimum choice of hot water storage device - taking into consideration additional drawing-off points and the frequency with which BigRain is used - the specific demand needs to be assessed.
- This product can help a building meet the requirements of Green Building Rating Systems, e.g. LEED®, BREEAM®, DGNB

Three-way diverter trim is sold separately

Stainless Steel	41 400 979-85 0050
Brushed Stainless Steel	41 400 979-86 0050

Recommended miscellaneous

BIG RAIN Cover for supply pipes - Stainless Steel 12 940 979-85

- length 450-480 mm
- for ceiling substructure installation
- stainless steel cover 125 x 50 mm

BIG RAIN Rain panel for ceiling installation or ceiling substructure installation - Stainless Steel

41 400 979

mm [inches]

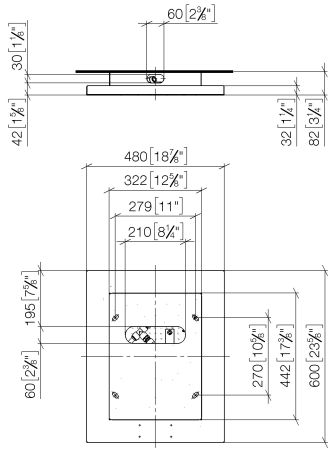

Flow rate chart

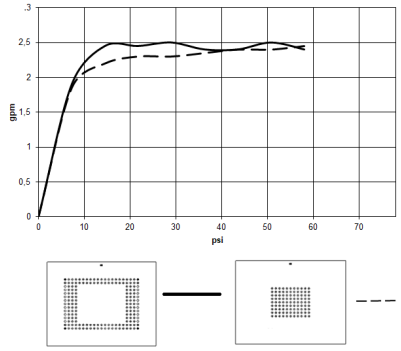

BIG RAIN Rain panel for ceiling installation or ceiling substructure installation - Stainless Steel

41 400 979

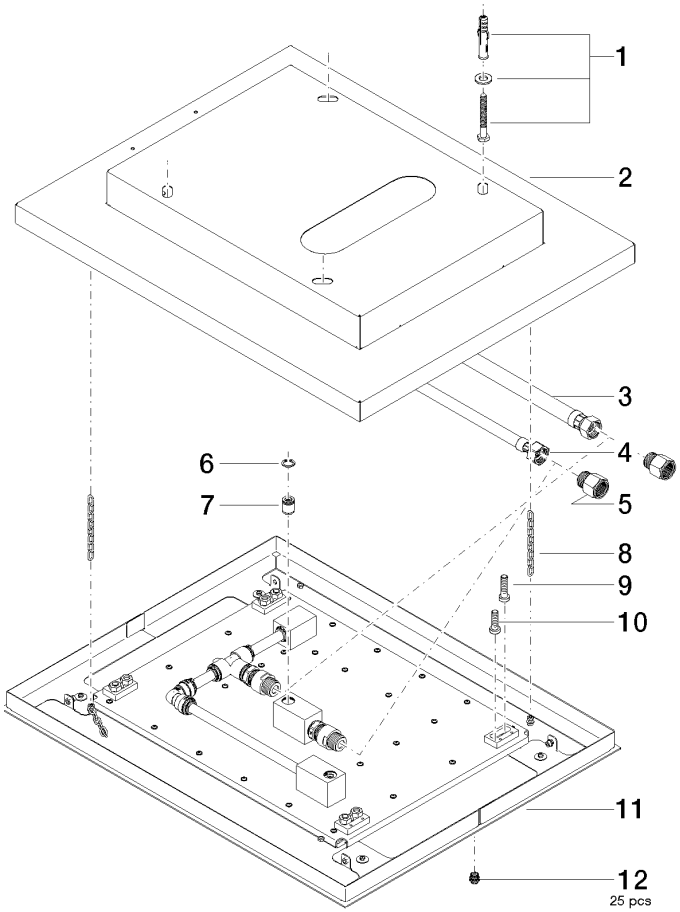

Spare parts list

No.	Item Number	Name	Quantity used	Delivery time
1	04 30 35 010 00 90	fixing set	1	2
2	04 17 09 001 00-85	casing	1	30
3	12 503 970 90	High pressure hose 1/2" x 1/2" x 600 mm -	1	2
4	12 502 970 90	High pressure hose 1/2" x 1/2" x 400 mm -	1	2
5	09 24 03 146 90	nipple	2	2
6	09 16 01 014 90	ring	2	2
7	09 23 01 042 90	insert	2	2
8	04 21 50 004 01 90	accessories	2	2
9	09 30 30 047 90	screw	4	2
10	09 30 30 095 90	screw	4	2
11	90 11 02 113 14-85	shower	1	2
12	90 29 03 036 00 90	insert	10	2

We reserve the right to change designs, product range and technical specifications without prior notice.
More information can be found at: www.dornbracht.com +49 (0) 2371 8899 900 mail@dornbracht.com